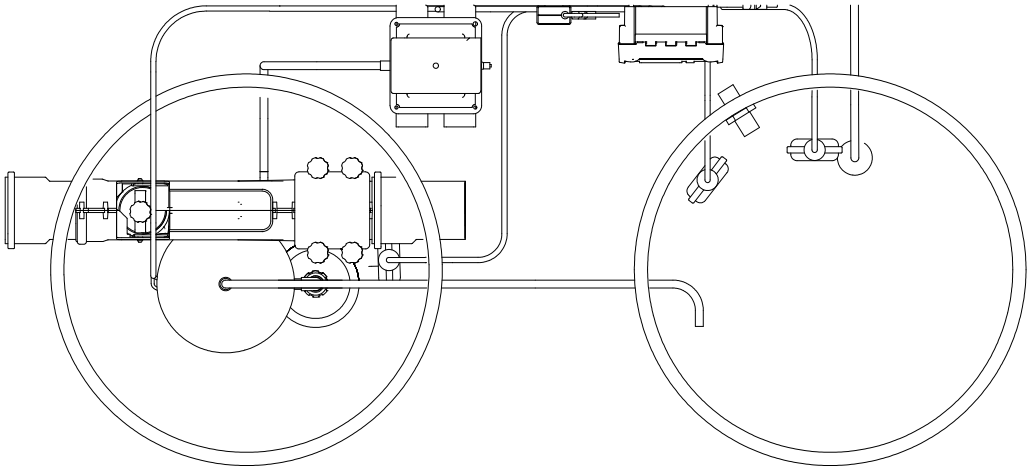

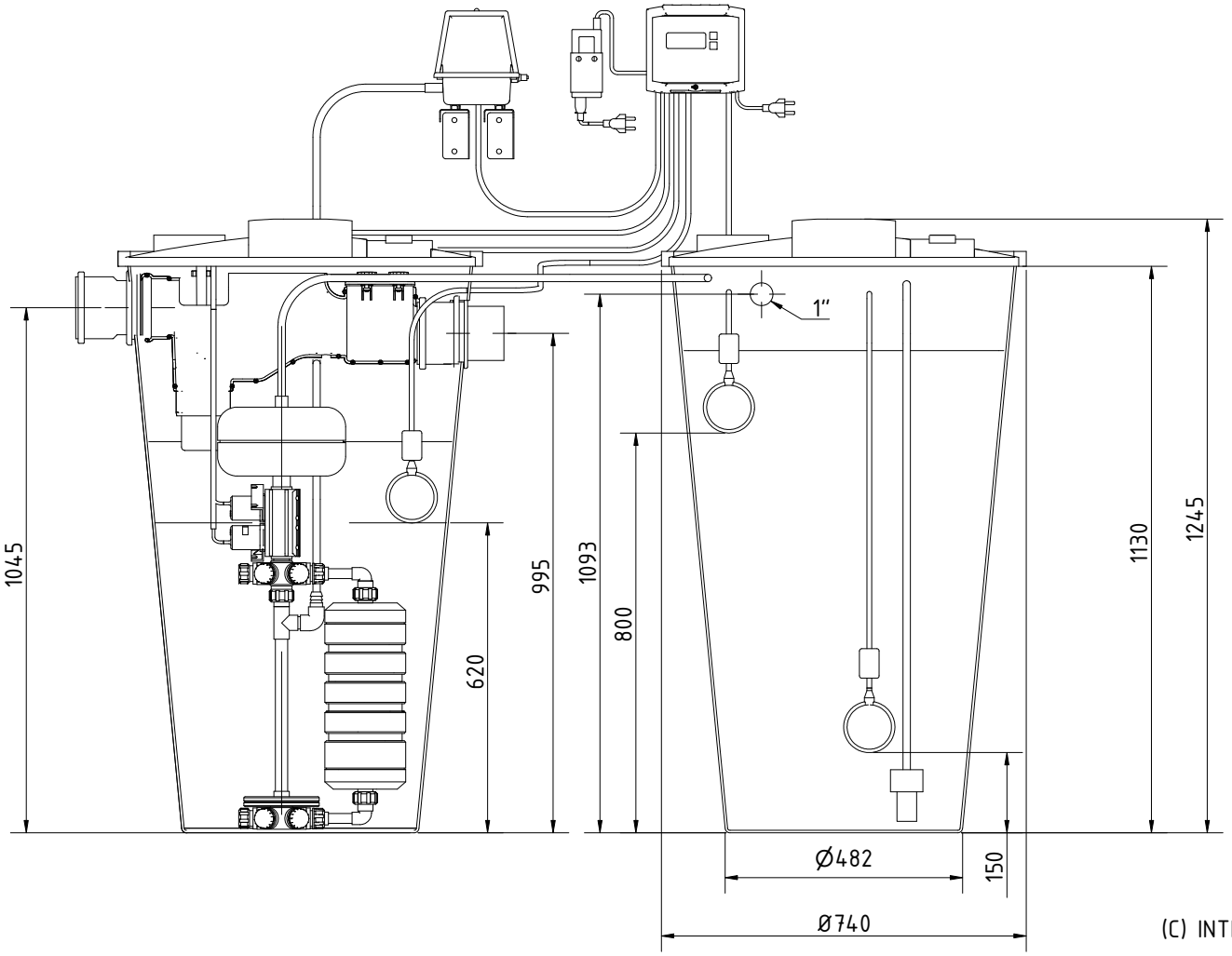

(C) INTEWA-GMBH